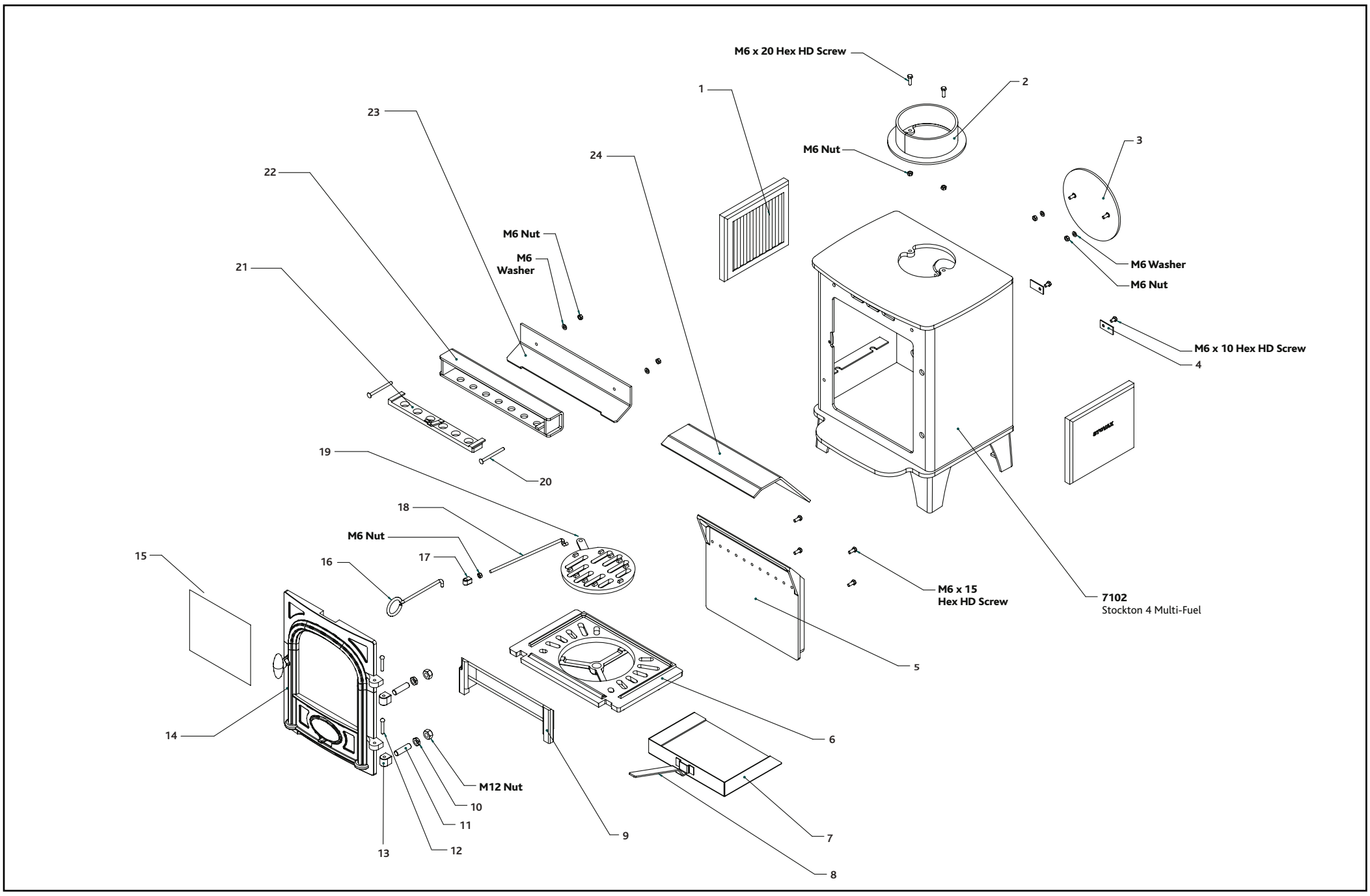

Ref. No.	Product Code	Description	Casting No.
1	**SMN24**	Side fire brick	CE7016
2	**SS14**	Flue adaptor	MEC7025
3	**SS13**	Flue blanking plate	MEC7026
4	**SM15**	Secondary air cover	ME7027
5	**SMN27**	Clean burn chamber	CA7027
6	**SMN36**	Main grate	CA7049
7	**SMN28**	Ash pan	MEC7036
8	**SM55**	Ash pan tool	RA7025
9	**SMN25**	Log guard	CA7031
10	**SM21**	Hinge block lock nut (M12)	n/a
11	**SM18**	Hinge block stud	FA7000
12	**SM20**	Hinge pin	n/a
13	**SM10**	Hinge block	MEC7001
14	**ST4DR**	Door frame	CA7030
14	**SMN5**	Door assembly	MEC 7099
15†	**GL0226†**	Door glass†	CE7025
16	**SMN33**	Operating tool	RA7184
16	**SM63**	Operating tool CE (from serial No.*ST00000)	MEC7402
17	**SMN34**	Riddling knob	ME7294
18	**SMN35**	Riddling rod	RA7182
19	**SMN37**	Centre grate	CA7050
20	**SM19**	Air duct coach bolt (M6x75)	n/a
21	**SMN30**	Air wash control slider	MEC7032
22	**SMN11**	Air wash duct	MEC7031
23	**SMN12**	Air wash deflector	RA7116
24	**SMN26**	Baffle	RA7117
*	**YM-F00004**	Pin 3 x 20	n/a
*	**SM16**	Glass clip	RA7019
*	**SM17.1A**	Door spindle	MEC7171
*	**FA9017**	Spring	n/a
*	**SM29**	Glass clamp screw	n/a
*	**SMN3**	Control cover	CA7034
*	**SM7.1A**	Door knob	CA7006
*	**SM23**	Door tool	CA7017
*	**SMN4**	Air control	CA7033

† See Accessories Price List
* See door drawing on page 30
For Rope Seal packs, please see page 37