526-059 & 526-551 GAS RIVA VISION LARGE BALANCED FLUE - STONE EFFECT

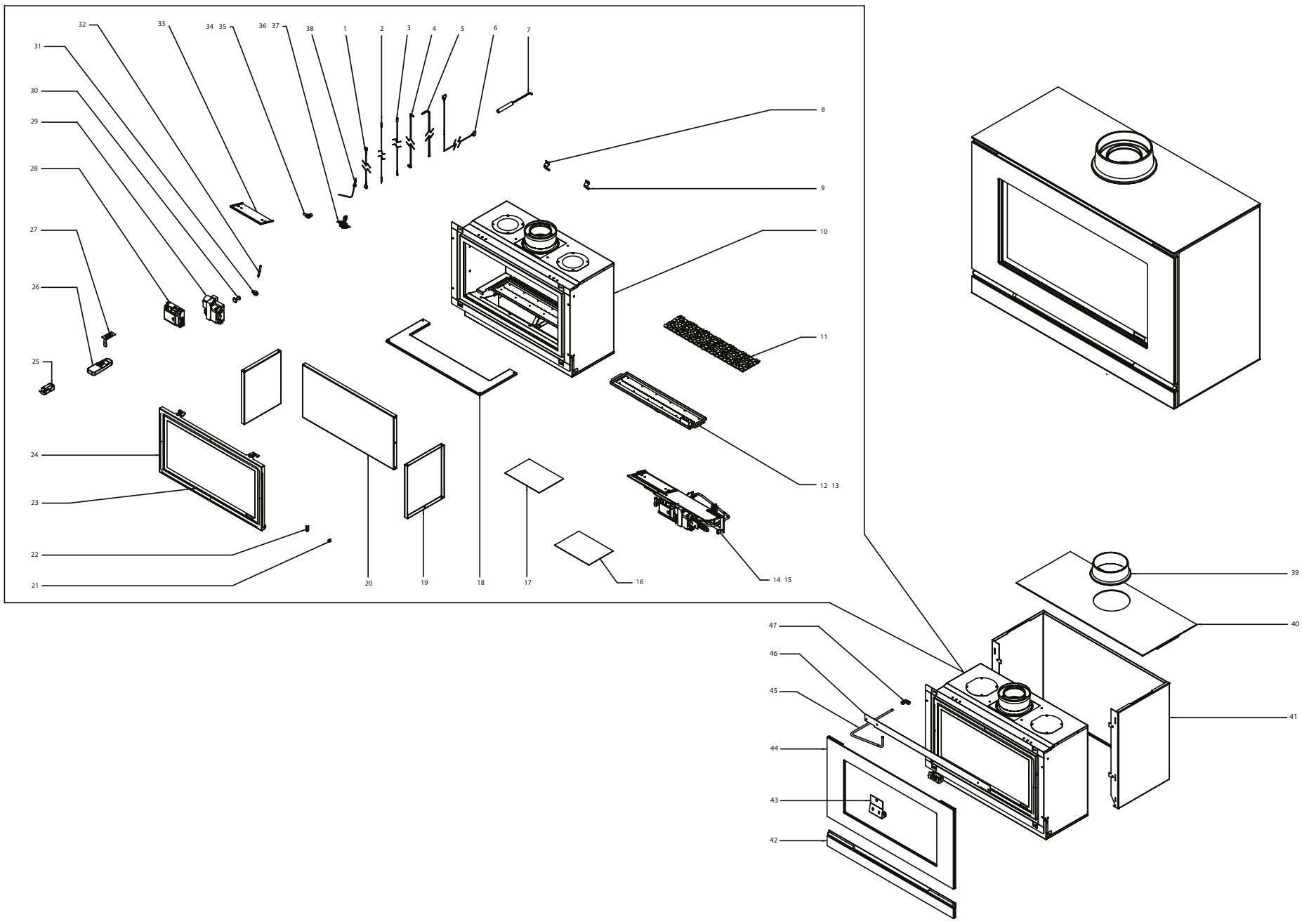

Ref. No.	Product Code	Description	Quantity
1	**GC0155**	CABLE WALL SWITCH LEAD G6R-CWSN/3000	1
2	**GC0125**	IGNITION CABLE G60-ZKI6/500	1
3	**GC0126**	THERMO CURRENT CABLE G60-ZKIRF/350	1
4	**GC0146**	GV60 500MM BATTERY CABLE G60-ZCB90/500	1
5	**GC0128**	SWITCH WITH CABLE G60-ZSKLF/500	1
6	**GC0133**	350MM CONNECTION CABLE	1
7	**GZ6690**	STUDIO B/F DOOR TOOL	1
8	**GZ2025**	SMALL B VENT CASSETTE AERATION COVER	1
9	**GZ3869**	AERATION ADJUSTER G25	1
10	**GZ7459**	MAIN HOUSING ASSY	1
11	**CE0579**	WHITE ITALIAN (STONES) PEBBLES 2.5kg	1
12	**GZ5983**	STUDIO 1 B/F NG BURNER ASSY	1
13	**GZ6363**	STUDIO 1 B/F LPG BURNER ASSY	1
14	**GZ9193P**	ENGINE ASSY LPG	1
15	**GZ9193N**	ENGINE ASSY NG	1
16	**GZ9095**	GENERAL FIXING KIT	1
17	**GZ9094**	B/F INSTRUCTION KIT	1
18	**GZ6493**	STUDIO 1 B/F INTERIOR LINING	1
19	**GZ6492**	STUDIO 1 B/F SIDE LINING	2
20	**GZ6491**	STUDIO 1 B/F REAR LINING	1
21	**FA0523**	BLK STEEL EDGE CLIP REF ECD/1622	2
22	**GZ6361**	STUDIO 1 B/F GLASS CLIP BRACKET	2
23	**GZ8743**	STUDIO 1 B/F GLASS, TAPE & ROPESEAL ASSEMBLY	1
24	**GZ5588**	STUDIO 1 B/F DOOR ASSY	1

Ref. No.	Product Code	Description	Quantity
25	**EL0410**	BATTERY HOLDER 4xAA S/CELL	1
26	**GC0149**	THERMOSTATIC HANDSET G6R-H4T-GA	1
27	**GC0143**	TOUCH-PAD	1
28	**GC0150**	GV60 RF NEW RECEIVER G6R-R4AN-Z9	1
29	**GC0123**	GAS COMB CONTROL GV60M1-C1A5K1L	1
30	**GC0092**	MERTIK MAG UNIT G30-EP290/110	1
31	**GC0124**	T/C CURRENT INTERRUPTER G60-ZUF9	1
32	**PI0075**	E-BOX B/F ELECTRODE BT00918	1
33	**GZ6369**	B/F CONTROL COVER ASSY	1
34	**IN0040**	185 SINGLE HOLE INJECTOR	1
35	**IN0007**	400 ELBOW INJECTOR P52 82 400	1
36	**PI0070**	PILOT BURNER LINEA LPG 440.1515.04	1
37	**PI0069**	PILOT BURNER LINEA NAT. GAS 440.1515.13	1
38	**PI0077**	THERMOCOUPLE ASSY 1000mm LONG	1
39	**8548GB**	CAST FLUE COLLAR	1
40	**GZ8945**	BF GLASS TOP ASSEMBLY	1
41	**GZ9118**	COMPLETE WRAP	1
42	**GZ9075**	ASH PAN COVER ASSY	1
43	**GZ9073**	BATTERY & CONTROL PAD BRACKET	1
44	**GZ8931**	MAIN GLASS DOOR ASSY	1
45	**GZ9120**	BF EXTENSION PIPE	1
46	**GZ9105**	FIXING BRACKET	1
47	**D6060-0810**	ELBOW EQUAL 8MM MG 19/8	1