(P)8592 RIVA 53 BALANCED FLUE - DRIFTWOOD

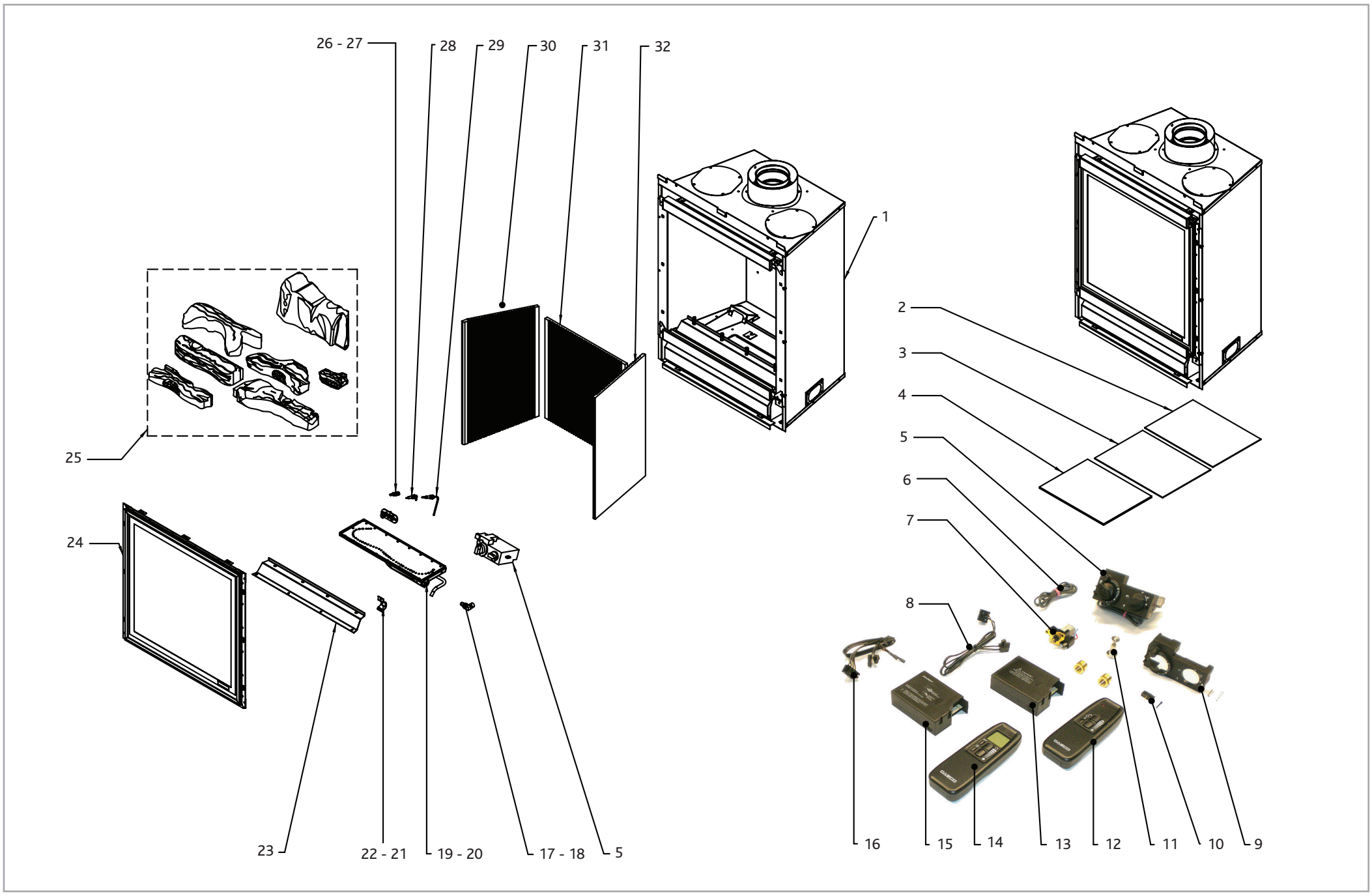

Ref. No.	Product Code	Description	Quantity
1	**GZ4011**	MAIN HOUSING ASSEMBLY	1
2	**GZ3963**	RIVA 53 INSTRUCTION KIT	KIT
3	**GZ3678**	RIVA 53/67/70 NG B/F INSTRUCTION & FIXING KIT	KIT
4	**CE0423**	VERMICULITE	1
5	**GC0088K**	MERTIK VALVE GV36-C1A0AKL-18L	1
6	**GC0090**	LEAD REMOTE	1
7	**EL0234**	GEARED MOTOR G30-EMS	1
8	**EL0237**	STANDARD RECV CABLE G30-ZRCS/350	1
9	**GC0087**	MERTIK CONTROL COVER G30-ZHN2	1
10	**EL0241**	MICRO SWITCH & SCREW G30-ZMS	1
11	**GC0092**	MAG UNIT G30-EP290/110	1
12	**EL0239**	STD BLK HANDSET G30-ZRHSO-Z26	1
13	**EL0235**	STANDARD RECEIVER G30-ZRRS	1
14	**EL0240**	THERMOSTATIC H/SET G30-ZRHTT-Z27	1
15	**EL0236**	THERMOTAT RECEIVER G30-ZRRT	1
16	**EL0238**	THERMOSTAT RECV CABLE G30ZRCT/350	1
17	**IN0051**	MAIN INJECTOR LPG	1
18	**IN0029**	MAIN INJECTOR NG	1
19	**GZ3965**	BURNER UNIT LPG	1
20	**GZ3964**	BURNER UNIT NG	1
21	**GZ2025**	AERATION PLATE NG (E)	1
22	**GZ2003**	AERATION PLATE LPG (A)	1
23	**GZ3985**	FRONT AERATION BAFFLE	1
24	**GZ3991**	GLASS DOOR ASSEMBLY	1
25	**CE0415**	LOG SET (CONSISTS OF 7 LOGS)	1
26	**PI0051**	PILOT BRACKET	1
27	**PI0015**	PILOT INJECTOR 19 HOOK (LPG)	1

Ref. No.	Product Code	Description	Quantity
28	**PI0026**	PILOT INJECTOR 27 HOOK JET (NG)	1
29	**PI0053**	90 DEGREE SPARK ELECTRODE	1
30	**CE0387**	CERAMIC PANEL RH	1
31	**CE0385**	CERAMIC PANEL REAR	1
32	**CE0386**	CERAMIC PANEL LH	1